INDIRES Newsletter

Information Driven Incident Response

September 2019

INDIRES
Information Driven Incident Response

Newsletter 2
September 2019

Table of Contents

Lack of information is a major hindrance to the effective response to a serious underground mining incident such as a fire, flooding, an explosion, or a fall of rock. INDIRES is a research project, the aim of which is to allow the rapid acquisition of information and to permit communication between affected miners, rescuers and mine management. By improving the efficiency of mines rescue operations, it is expected that this initiative will help protect the welfare of personnel and the future operation and profitability of the mine.

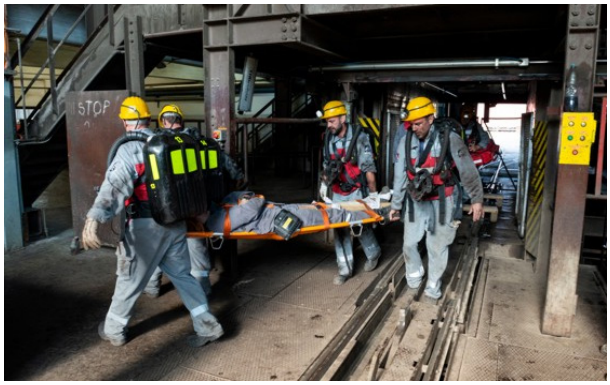

INDIRES is a three-year collaborative project. The interdisciplinary consortium comprises 10 organisations from five member states of the European Union. Partners include two coal producers, three research organisations, three universities, a civil engineering consultancy and an equipment manufacturer.

Front & Back Cover: Rescue Practice
Photos: Premogovnik Velenje

This project has received funding from the Research Fund for Coal and Steel under grant agreement No 748632.

The INDIRES Project: a Year in View

*With two years of progress to report, Newsletter Editor **Mike Bedford** reviews the major achievements in the INDIRES project, particularly those that have taken place over the last twelve months.*

INDIRES is a research project funded by the European Union's Research Fund for Coal and Steel (RFCS). Standing for *INformation Driven Incident RESponse*, it aims to provide information immediately after a serious mining accident, thereby empowering rescue teams to assure the safety of those personnel affected by the incident, and help protect the future of the mine. There are ten project partners, including mine operators, universities, consultancies, research organisations and equipment manufacturers, in five European countries – see inside back cover. Work on INDIRES started in July 2017.

It seems hard to believe that the INDIRES project is now in its third and final year. However, the impressive results achieved so far certainly give testimony to two years of dedicated hard work by those organisations involved.

In this Newsletter, we investigate what's been achieved to date, looking at the benefits to the mining community, without getting bogged down unduly in the technicalities.

We trust that there will be plenty here to interest you and demonstrate something of the contribution being made to the safety of miners and to rescue personnel. In the remainder of this article, we take an overview of the main areas of research being conducted. Detailed articles on several of these topics appear in this Newsletter.

Communications

Given the objective of improving the flow of information during the response to a mining incident, it will come as no surprise that communications is a major theme. In particular, two methods of radio communication are being developed, one that sends messages through the rock, and the other that works along galleries, guided by a temporarily-laid wire. Neither of these systems rely on the mine's operational communication networks because these could have been rendered inoperable by the accident. These two initiatives will provide person-to-person communication during the incident response, and they will also provide a service to other equipment being developed.

Sensors

Sensors are important to the effective operation of a mine but, like communication systems, they can be destroyed by explosions, fires, rock falls and floods. For this reason, resilient sensors are being developed that will withstand these sorts of occurrences. These sensors are being engineered to survive harsh conditions, and will be able to provide rescuers with vital information on environmental conditions in the affected area of the mine.

Sensors are also being adapted for use onboard the robotic vehicles that are being developed in INDIRES.

Photo: Premogovnik Velenje

Robotics

Small unmanned vehicles are being developed in INDIRES for information gathering in the early stages of the response to an accident. This data will permit rescue controllers and mine management to decide whether it's safe to send rescue personnel into the affected area.

These robots will be able to access areas where human rescuers cannot easily go, for example, through a fall of rock. To provide access in a wide range of hazardous environments, several different types of robot are being developed, and these will work together collaboratively. Included here are tracked ground-based robots, flying drones, and crawling robots.

Drilling and Roof Support

Small robots will be capable of moving through environments that are impassable or unsafe for human rescuers. However, some incidents would even prevent access by such small exploratory vehicles. Under such circumstances, the only way to reach trapped miners might be via a rescue tunnel. To facilitate this, work is being carried out on a novel, easily transportable drilling rig and lightweight composite props to support the excavation.

The drilling rig has progressed to the point that productisation could start (this being the aim within INDIRES), while prototypes of the composite prop have already been produced. These will now be used in field trials in one or more of the mines represented in the project.

Simulation

Real data is obviously preferable, but when adequate information isn't available, simulation can prove a valuable resource. Simulation studies have involved predicting the environmental conditions immediately after a fire incident, and discovering the most likely escape route that miners will have taken to reach a place of safety.

Transport

Even though the drilling rig and composite props are being designed to be lightweight and compact, rescuers will need assistance to transport them to the place of deployment. An electrically powered vehicle is, therefore, being developed for this purpose.

Also in this Newsletter

In addition to the articles describing particular aspects of the research and development, you can read about the importance of collaboration as evidenced by the two partners' meetings that have taken place over the last year. We also look at several serious accidents that have occurred in mines, worldwide, since our first Newsletter, thereby providing a stark reminder of the importance of the work being conducted in the INDIRES project.

Composite Props: a new Approach to Roof Support for Mines Rescue

__Wojciech Masny__ and __Aleksander Wrana__ of GIG, the Central Mining Institute in Poland, describe their development of a novel roof support, using a lightweight composite material, that will be used for supporting temporary access tunnels during a rescue operation.

The Requirement

As a result of underground accidents, workings may collapse. In order to safely reach the miners in the hazard zone, therefore, it is sometimes necessary to drive a new heading. This may be quite complicated, especially due to rock debris and damaged parts of supports and other underground equipment. The initial design of a novel portable low-power drilling rig for use in rescue situations has been undertaken in INDIRES, as described in the first newsletter.

The main purpose of the rescue tunnel support is to provide protection for the roof, to ensure the highest possible safety for rescuers and miners. In order to carry out rescue work, props are used as both direct and indirect supports for the roof, as well as for rock waste when an emergency heading is driven.

The following other requirements apply to a rescue tunnel support:

- They should provide effective stabilization of newly driven rescue headings.
- High strength components should be used but with a low mass.
- They must allow bends, to avoid obstacles such as damaged heavy equipment.
- Installation must be quick and easy, resulting in rapid advance,
- It should be possible to adjust the dimensions.

A New Material

Traditionally, the main type of rescue tunnel support is a wooden prop with a straight beam and two legs. The main advantages of this support are very easy installation, the ease of working with wood so the dimension can be adapted to the conditions, low mass, and availability. But the wooden support has disadvantages too. Foremost here is the lack of a setting force and the need to accurately process the ends of the legs where they connect with the beam.

Supports with steel elements – for example friction, hydraulic and pneumatic props – are also used by rescue teams. The steel props have a higher bearing capacity than wooden supports, and they act as active supports with setting force, in the case of hydraulic and pneumatic props. The main disadvantage is the weight of the steel elements.

Considering the disadvantages of wooden and steel roof supports, the work on props made from a composite material, for use as a rescue tunnel support, has been undertaken.

According to Dobrzański (*Engineering Materials and Material Design*, WNT. Warsaw 2006) composite is referred to as engineering material with a heterogeneous structure, being a combination of two or more components, with different physicochemical properties and strength parameters. Usually one of the components – typically particles, fibre or fabric – is responsible for the basic properties of the composite material such as its tensile strength, abrasive wear, etc., while the other – for example a polymer, metal or ceramic material – is the binder.

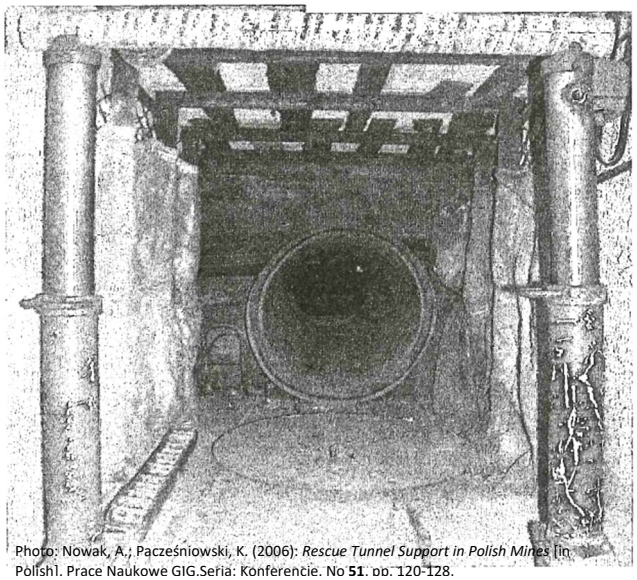

Photo: Nowak, A.; Pacześniowski, K. (2006): *Rescue Tunnel Support in Polish Mines* [in Polish]. Prace Naukowe GIG.Seria: Konferencje. No **51**. pp. 120-128.

Composite props will offer several advantages over the wooden and steel roof supports which have previously been used to support new headings during mines rescue operations.

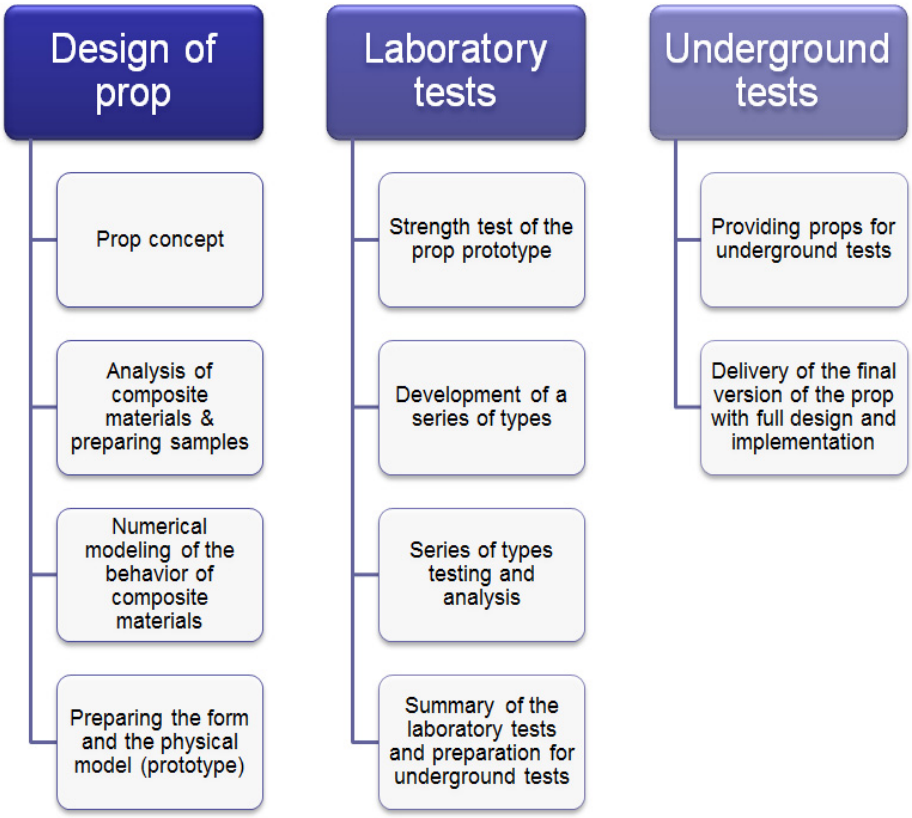

The design process of the composite material prop

The properties of the composite material result from the properties of each of the component materials. The ability to combine phases without changing their properties – for example, they should not dissolve in the composite – provides an opportunity to create a material with properties that cannot be obtained separately by any of the components.

A comprehensive overview of the design process is shown in the diagram to the left.

Consultation with Rescue Teams

The first step in the design of the prop, i.e. establishing the prop concept, was particularly important because it affected all subsequent activities leading to a practical prop. For this reason, following a comprehensive literature analysis, a meeting with mine rescuers was organized at the Ruda hard coal mine in Poland, in order to develop the fundamental principles of the prop concept.

As a result of discussions about various solutions, the basic requirements of props for use during rescue operations were

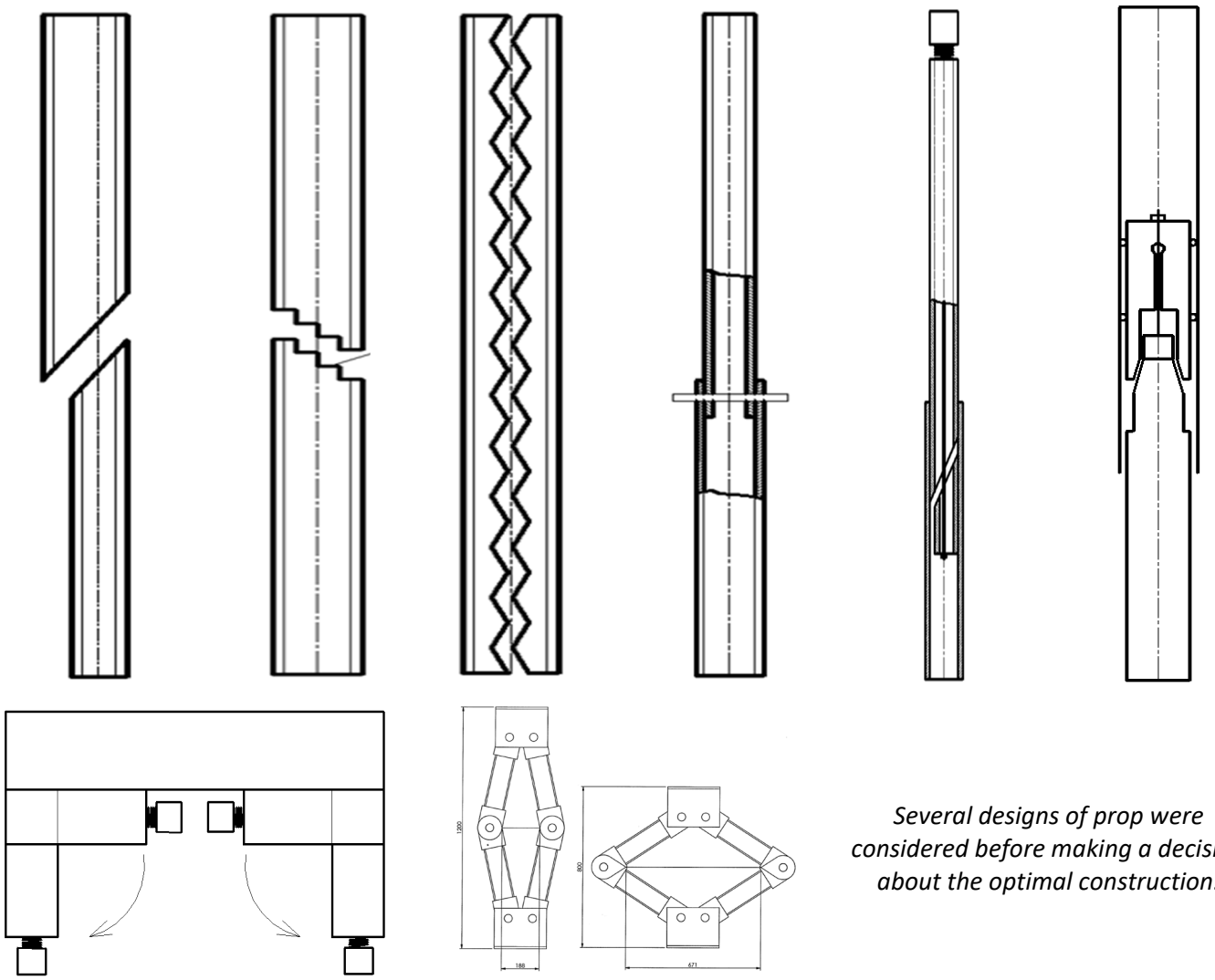

Several designs of prop were considered before making a decision about the optimal construction.

specified and, during the 2nd meeting, the best concepts were chosen. It was decided that the main features of the composite prop should be as follows: (1) low weight, (2) variable height up to 1.5m, (3) adjustable crown and rigid base, (4) the possibility of assembly by a single person, (5) speed of assembly, (6) simplicity of operation, (7) ease of transport, (8) ease of handling, and (9) reusability.

Material Selection

Equally important was the selection of the composite material and the associated phase of laboratory testing. A wide range of laboratory tests were carried out and different properties were analysed.

Prototype Production & Testing

As a result of the design phase, a physical prototype has been built. This prototype was laboratory tested too. The main goal of the laboratory tests was to assess:

- the stability of the prop prototype,
- any deformation of elements (e.g. pipes) made of composites,
- any deformation of steel elements,
- the connections between steel and composite elements,
- the possibility of buckling,
- the strength of the bolt, also in terms of the material used,
- maximum deformation.

Laboratory tests have shown very promising results. In particular, among other impressive characteristics, the maximum load bearing capacity of the composite material prop was nearly 200kN, and the prop subjected to the tests showed no tendency to buckling or other deformations. Furthermore, the laboratory tests have also become the basis for carrying out work on the optimization of the construction, mainly aimed at reducing the mass and the diameter of composite pipes. This further development will take place in the near future.

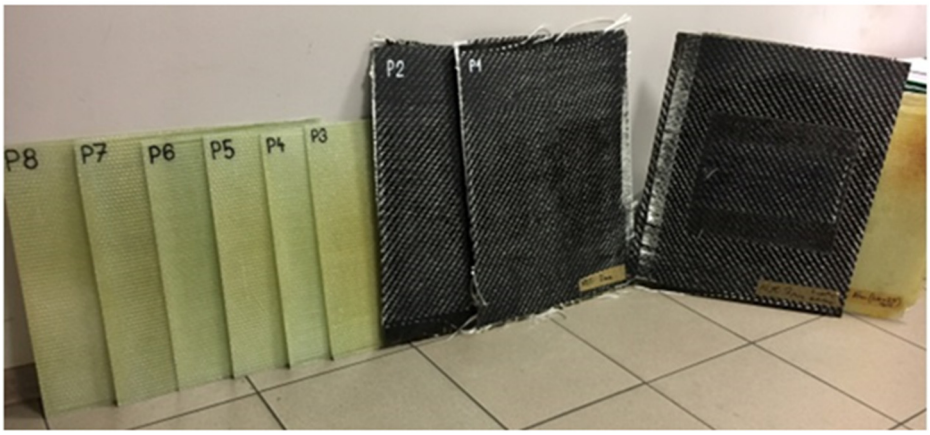

16 samples of different composite materials, including those shown above, were subjected to extensive laboratory tests.

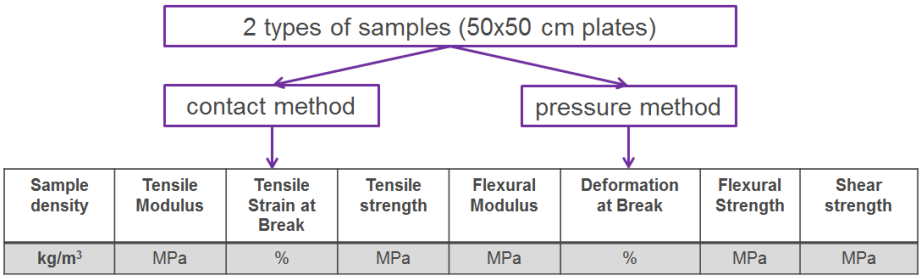

Sample density	Tensile Modulus	Tensile Strain at Break	Tensile strength	Flexural Modulus	Deformation at Break	Flexural Strength	Shear strength
kg/m³	MPa	%	MPa	MPa	%	MPa	MPa

For each sample, a range of properties were measured, as shown above.

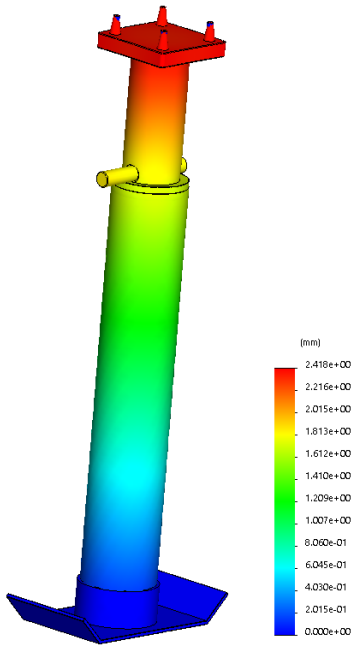

Left: Numerical calculation, Middle: Prototype prop, Right: Laboratory tests

No End in Sight to Human Cost of Mining

*Looking at the incidents that have plagued mining over the previous year, **Mike Bedford** finds there's no room for complacency, and welcomes the contribution to safety that INDIRES will offer.*

When we were first contemplating the INDIRES project, back in 2017, several major mining accidents were uppermost in our minds. Included were those at Sago Mine, West Virginia, in 2006, Aracoma Alma No. 1 Mine, West Virginia, in 2006, Darby No. 1 Mine, Kentucky, in 2006, Crandall Canyon Mine, Utah, in 2007, Pike River Mine, New Zealand in 2010, and Soma Mine, Turkey in 2010 where new fewer than 310 miners lost their lives. However, we were motivated by the likelihood that new developments could reduce the human impact such incidents.

Since these high-profile disasters, catastrophes in mines have been less in the public eye, but this certainly doesn't mean that mining has suddenly become a whole lot safer. Indeed, it comes as a stark reminder that many miners, worldwide, have lost their lives since the first INDIRES Newsletter was being put together just over a year ago. Here we look at some of the incidents that never attracted worldwide attention but were, nevertheless, disastrous for those involved.

China

It's a sad but inevitable fact that some incidents are more newsworthy than others, purely because of their geographical location. Many people outside of the mining industry, and even some of those involved in mining, will be unaware, therefore, of the scale of serious mine accidents in China during the last year or so.

On 20th October 2018, a rock burst at the Longyun coal mine in Shandong province caused the blockage of a tunnel, killing eight miners immediately, and trapping several others. After a ten-day rescue effort, it was reported that the final death toll was 21.

In December 2018 seven workers were killed and three were injured in a transport accident at a coal mine in China's south western city of Chongqing.

21 miners were killed at the Lijiagou mine near the city of Shenmu in China's Shaanxi province in January 2019. The incident involved a roof collapse.

While these were some of the accidents with the highest numbers of casualties, they don't even hint at the overall scale of mining incidents in China. During 2018, there were no fewer than 224 incidents, resulting in the death of 333 workers.

Asia and Africa

Other parts of Asia, plus large swathes of Africa, have also endured mining disasters over the past twelve months.

Again not widely reported in the media, an explosion at a coal mine in Pakistan in August 2018 caused 19 deaths, including those of six rescue workers. Meanwhile, two incidents in mines in Afghanistan claimed the lives of 14 miners in April 2019, and an accident at a tin mine in Rwanda, in January, involved the deaths of 14 miners. This latter catastrophe was just one of several recent incidents in Africa's mines.

The death toll might not compare to that of the Courrières disaster, but the scale of mining incidents today is still a call to action.

Illegal Mining

It seems unlikely that the initiatives being developed in INDIRES would impact such incidents, but no survey of recent mining accidents would be complete without mentioning the tragedies at illegal mining operations.

The state of Meghalaya in India experienced one such incident in December 2018 with the death of 15 miners in a flood. But of the biggest death tolls took place at a copper mine owned by Glencore in the Democratic Republic of the Congo in June this year. 43 artisanal miners paid the ultimate price when their workings collapsed.

The Western World

The incidents described so far have all been in Asia and Africa, but it would be wrong to think that the West has been immune from such catastrophes, even if the headline death tolls aren't as great. 2018 statistics for the USA reveal 27 mining deaths, of which 12 involved coal mines.

Mines in the European Union haven't been without incident, either. On 20th December, an explosion rocked the CSM coal mine near Karvina in the Czech Republic. 13 miners lost their lives, making this the worst mining accident in the country since 1990, when 30 miners were killed in the same region.

The INDIRES Legacy

We can never become complacent, but despite the harrowing incidents reported here, we can take some comfort from the fact that horrific mining accidents, such as the one that claimed 1,099 lives in Courrières, France, in 1906, appear to be consigned to the past. However, even one life lost is one too many. If the results of the INDIRES project are able to save even a single life, therefore, it will surely be considered a success.

Radio Communications for Use During Emergencies

***Mike Bedford**, **David Gibson** and **Declan Vogt**, of the University of Exeter, and **Ángel Rodriguez**, of Carlos III University Madrid, report on progress with the radio communication technologies being developed in INDIRES.*

Two strands of research into radio communications are being undertaken. Both will operate even if the mine's fixed communications infrastructure has been damaged or even totally destroyed in an incident. They will, therefore, play a key role in providing communication facilities for use in planning an incident response. Here we take a look at these two developments – wire-guided radio and through-the-earth radio systems.

Wire-guided Radio

Technology is being developed to allow communication between members of an underground rescue party, and between the rescuers and rescue control. The system does not rely on the mine's wired network. Referred to as wire-guided radio, it uses a temporary wire that is laid along the gallery by the rescue team, as they progress. This wire guides radio signals that would otherwise not progress very far along mine galleries, because they are almost totally blocked when bends are encountered. Unless guided, radio signals would also be severely hindered by falls of rock that would effectively reduce the gallery's cross-section dimensions.

Unlike previous wire-guided radios, rescuers will not need to clip their handset on to the cable.

Wire-guided radio systems have previously been available for mines rescue, indeed one such system was developed in a previous European research project. However, these previous systems have required the rescuers' handsets to be in close proximity to the wire, as shown in the photo on this page, or else for Bluetooth repeater units to be used. In the photograph, it can be seen that the handset actually has to be clipped onto the wire, even though an electrical connection is not required. The aim in INDIRES is to enable rescuers to be freed from the need to move close to the wire in order to communicate. This way, they will be able to remain in constant contact while they are anywhere within the width of the gallery.

Simulation Studies

When this work was first started, it was planned to base it on a small diameter cable with two parallel conductors, rather like some types of low-voltage power cables, or speaker cables. However, initial computer simulations, that were carried out before building any equipment, revealed that this would not work well if the cable was allowed to run close to the wall or floor of the gallery. In particular, signal would leak from the cable into the surrounding rock. Because rescuers cannot afford the time to hang the cable from hooks while laying it along a gallery, a slightly different approach was devised.

Instead of using a twin parallel conductor cable, it was decided that we would use coaxial cable, otherwise called "coax", similar to that is often used for TV antennas. A small diameter coaxial cable would be chosen to reduce the weight of cable that would have to be carried by the rescue personnel.

Coaxial cable has an insulated centre conductor which is completely surrounded by another conductor known as the shield, which is surrounded by an insulating jacket. The reason for this construction is so that it does not leak signals into the air around it, nor does it allow other signals to enter the cable. For use with a TV antenna, this is ideal because it means that all the signal arrives at the television, but interfering signals don't affect it. However, for a wire-guided system, we specifically want some signal to leak out of the cable while most of it continues along the cable. In addition, we want it to work in the reverse direction, thereby allowing signals from nearby handsets to get into the cable. This is the principle of leaky feeder communication systems that are used in transport tunnels and in some mines.

However, normal leaky feeder systems use a specially designed type of coaxial cable which is large in diameter, heavy, and expensive. All these characteristics would be unsuitable for a temporary wire-guided system. For this reason, we have

Unlike traditional leaky feeder cables, shown at the top, the coaxial cable used in the INDIRES system, at the bottom, will be much smaller and lighter.

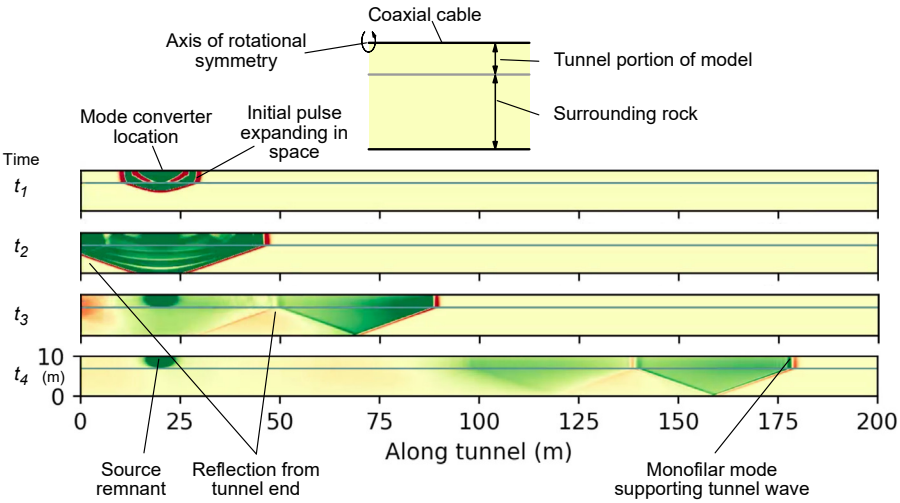

Computer simulations of a wire-guided radio system show that the signal permeates the complete cross-section of the gallery, not only the region very close to the cable as achieved with previous equipment.

devised a method that is able to use low-cost, small diameter, ordinary coaxial cable. The solution is to cut away the shield from short sections of the cable to provide adequate signal leakage. We have now carried out computer simulations to guide us in designing and building prototype equipment which will soon be tested in several underground test sites.

A 40MHz operating frequency will allow wire-guided handsets and their antennas to be not much larger than CB handhelds.

The diagram shown above is reproduced from the software we used to predict the performance of the wire-guided system. The coaxial cable is near to the roof of the gallery, and the image uses colour to indicate the strength of the signal. Red represents the strongest signal but even the weakest green signal is strong enough to allow communication. It can be seen that the signal occupies the complete cross-section of the tunnel. Such studies allowed us to make important decisions on the type of coaxial cable, the frequency of operation, the length of the sections of removed shield, and their separation.

Prototype Hardware

Based on the results of computer simulations, and subsequent experimental confirmation, the specification of the handsets for wire-guided communication was produced. Decisions on the distance between the length of the breaks in the cable's screen, and their separation were also made.

The working frequency will be in the region of 40MHz. At first sight, the frequency might not seem to be of major interest to the rescue teams, but it does have some significant implications. Perhaps most importantly, it affects the size of the antenna. Although a 40MHz antenna will probably not be as compact as the antennas on a VHF or UHF handheld radio, it will still be short enough that it can easily be fitted to a wire-guided handset for use in a mine gallery. In this way, the handsets will be similar to those used by CB radio enthusiasts on a nearby frequency of 27MHz, except that the case will be bulkier, because of the ATEX requirement.

Through-the-Earth Radio

We looked at through-the-earth (TTE) radio in some detail in the first INDIRES newsletter and, in particular, we saw how it will operate as a mesh network to reduce power consumption significantly. In this newsletter, therefore, we won't say a lot about how it will be used or how it works, or describe the further theoretical studies that we've carried out. Instead we'll delve into the development and testing of prototype hardware. If you're unfamiliar with radio circuitry, you might not understand all this, but you'll certainly see that we've been busy.

Building on the work summarised in the first newsletter, it was decided to investigate the possibilities of using very small magnetic loops as transmitting and receiving antennas. It was also decided to focus on tuned loops, despite their admittedly small bandwidth and hence limited data rate. However, they have some significant advantages. First, they are fairly small, and second, it means that the design of the power amplifier is quite simple. On the other hand, it was realised that a small bandwidth of just a few kHz would suffice for establishing emergency communications and for transmitting critical environmental sensor readings.

Experimental and modelling work were carried in parallel in the laboratory. There is a rule of thumb in electrically-small antenna design that says that efficiency is – if other conditions remain equal – proportional to the fourth power of the diameter. So, "the bigger, the better", applies but, on the other hand, practical considerations limit the size of the antenna. Therefore, several geometries of loops – or coils – were tested, trying to find the lowest practical diameter for any given frequency.

Loops with diameters of 60–1,000mm and with 6 to 100 turns, were tested in the laboratory. In each case, we measured the lumped electrical parameters of self-inductance and parasitic capacitance. Then, they were tuned at some frequencies of interest, between a few hundred kHz and a few MHz, using a switched-capacitor bank. The apparent resistance in the range of interesting frequencies (especially at resonance) was measured using a Vector Network Analyzer (VNA). In parallel, they were modelled, using the measured electrical parameters. Both lumped and distributed approaches were used – taking into account the skin and proximity effects on the apparent resistance – obtaining in all cases a good agreement with the measured results.

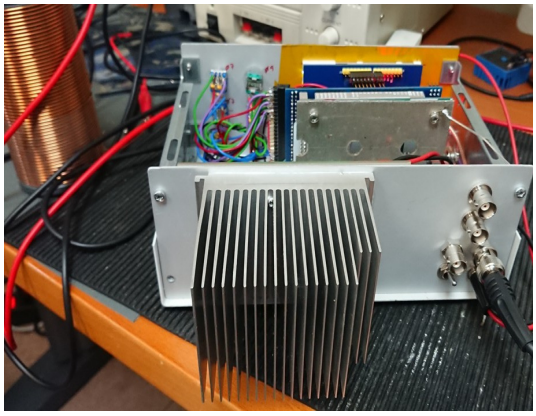

RF Power amplifier used in laboratory tests

Testing in a training mine

Gas discharge (glow) in a neon lamp when applying power to a tuned loop

Following extensive experimental work on prototype equipment in the laboratory and underground, as shown here, the equipment is now being engineered into a form that is suitable for use in the mine environment.

Testing in a training mine

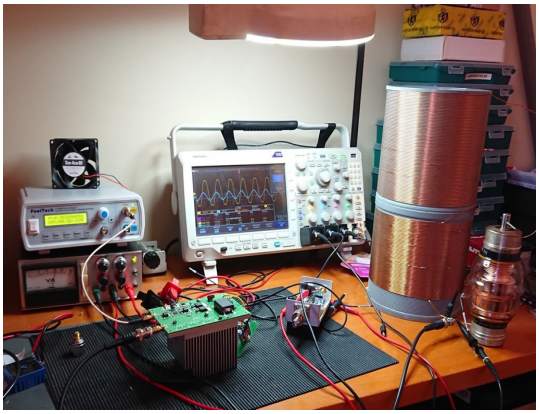

Testing loops in the lab

Testing in a training mine

As result, a set of rules for antenna design for a given frequency were generated. Two diameters, a small 135mm one and slightly larger 175mm one, were selected for implementation.

Then, some tests using "real" power started. The limit in ATEX standards for RF power is 6W, so the antenna was driven with a purposely-built power amplifier delivering up to 10W. Some difficulties were found at this stage for, as predicted by the modelling work, the voltages and currents in the tuning capacitor were very high, and therefore arcing in air capacitors or burning of mica-silver capacitors was observed. Consequently, a high voltage vacuum trimmer was used in all testing activities involving moderate power. A satisfactory power injection in the antenna – when driven at the tuned frequency – was observed in a quite spectacular way by sparks appearing in nearby conductors, or spontaneous gas discharge and glowing in neon or fluorescent lamps placed close to the loop and tuning capacitor. Needless to say, the real equipment will not behave this way.

The next step was to carry out testing in a location that's more similar to a mine. Tests were arranged in a training mine owned by HUNOSA, a coal mining company that, although not involved in INDIRES, kindly provided support during these tests.

These tests proved quite successful, although it was found that electric wiring in the mine had a significant effect on signal propagation, improving it a lot, and allowing more distant points than expected to be reached. Therefore, most of the tests were carried out with battery power, placing the transmitting loop as far as possible from power cables. Transmission distances of around 10 metres through earth and hundreds of meters when signal was coupled to power lines were observed, allowing a high degree of confidence in the successful conclusion of the development work.

Here we show a selection of photos of the laboratory and underground tests we've been conducting in the last year. The photographs are specifically of test equipment which has been designed purely to allow experimentation. It has not been designed to survive the mine environment, and it has not been designed with ergonomics in mind. So, although we show these photographs so you can see something of what we've been doing over the last twelve months, please don't think that it will look anything like real world equipment. Equipment based on the technologies developed in INDIRES would look very different.

Acknowledgement

Thanks to HUNOSA, and especially to Mr. Raúl Gonzalez, Mining Director, for granting access to the training mine in Sueros Colliery and for providing support in the tests carried out there.

Choosing the Number of Nodes

One of the key considerations is how dense our mesh network should be. We know that with only a few widely-spaced nodes, each transmitter would have to be very powerful and would be large and expensive. The entire purpose of the mesh network is to reduce the overall cost by using smaller, lower-power transmitters.

The reason this works is that the power needed to transmit for a given distance rises at least as the square of the distance and, for a near-field system, it rises as the sixth power of distance.

However, when considering the overall cost, there is a law of diminishing returns, because the overall installation cost will rise with the number of nodes, even though the nodes themselves are smaller and much cheaper, overall. A mathematical analysis shows that there is an optimum way to split the cost between the installation cost, the component cost and the antenna cost; and it dictates the ideal spacing of the nodes. It is not easy to allocate a precise costs to each parameter but one conclusion we were able to draw was that, for some systems, the large 'sensor nodes' could usefully be supplemented by smaller 'repeater nodes'. The repeater nodes would be small, and have a range of perhaps only 20–50m, which is lower than the expected spacing of the system described above.

A mesh with a large spacing of 200m or more would conceivably involve direct transmission through the rock, from one roadway to another. However, a mesh with a smaller spacing would only operate along the passages (and through any rock falls). The network is more linear than mesh-like and so, in the event of a node failure, it must be designed to be able to skip a node. This means that the nodes must be spaced with plenty of reserve. Detailed arguments to do with frequency and rock conductivity then lead to the conclusion that the nodes should operate at a low frequency well within the near field. This has an interesting side effect because, in the near field, the effect of the conductivity of the rock becomes vanishingly small. This makes the system's performance easier to predict, as well as making it easier to design and test.

Alternative Antennas

The possibility of using less powerful transmitters in nodes that are more closely-spaced calls into question whether we can build a single 'one size fits all' system. Installation costs and the conductivity of the rock might dictate the design of substantially different systems for different applications.

So, although we have begun practical tests using the air-cored squat cylinders described above, we have not completely ruled out other antennas. Tests with some alternative designs are being considered.

One attractive option is to use an untuned loop antenna. Wideband untuned loops have seen success in sub-sea applications where video can be transmitted over short distances.

The characteristics of an untuned loop mean that it can be designed to avoid skin, proximity and self-resonance effects in its winding so, in these respects it is a more attractive option than the tuned antenna. Additionally, there are no design dilemmas concerning the number of turns to use, and we can use a single turn of wire or tape. With a tuned antenna, using a few turns of thick wire instead of a larger number of thinner turns can cause problems due to the low resistance of the winding, which then requires a very high current and can result in an inefficient power amplifier. But the impedance of an untuned antenna is largely governed by the inductance, not the resistance. It is true that there can be problems in driving an untuned antenna, but these are largely related to the use of an analogue power amplifier and do not apply to a digital system, although that is an added complexity to be dealt with. It is also interesting to note that if the limiting factor in the design of the antenna is the reactive voltage, then the performance (that is, the magnetic moment it produces for a specified power consumption) when it is tuned is identical to the performance when it is untuned.

A node based on a small untuned loop might use under a watt of power and provide a range of 20–50m in a box about the size of a large paperback book. Some experimental work is planned.

Another antenna, mentioned in our previous newsletter, uses a small ceramic tile. Such an antenna is expensive and requires specialised electronics to make it work but it does have some potential benefits. Originally, we did not think it could be used as a receiver but our latest analysis suggests that this might be a possibility. It is another option for a low-power repeater node and we hope to run some comparative tests in due course.

Two other alternative antennas must not be forgotten either. Ferrite rods can have problems handling the transmitter power required but are ideal for use as a receiver – in fact, there is no reason why the same type of antenna has to be used for the transmitter *and* the receiver.

Lastly, grounded dipoles are known to be highly efficient, but they may run into problems with ATEX certification. They are another candidate, to consider if the current trials indicate any difficulties. As noted above, there isn't a 'one size fits all' solution and an application – whether for reasons of cost or geology – might require a different antenna system.

Mesh Network Simulation

We explained the concept of a mesh network in our first newsletter. To run simulations of the routing algorithms we are using a network of Raspberry Pi computers. The advantage of this approach is that we can develop the so-called 'layer protocols' using standard web tools. The Raspberry Pi devices are connected to an Ethernet network for this simulation, rather than being linked by radio.

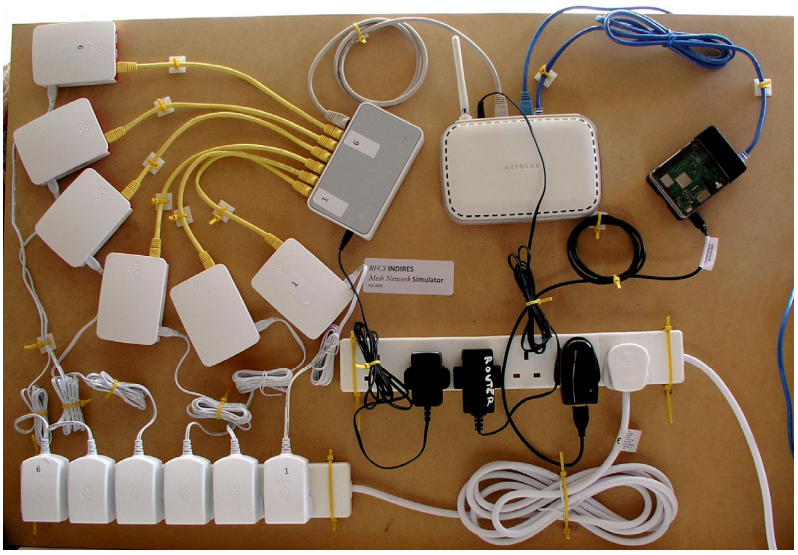

Mesh Network Simulator

Here, six Raspberry PI computers are connected to a network switch and a router to provide a method of simulating a mesh network with six interconnected nodes.

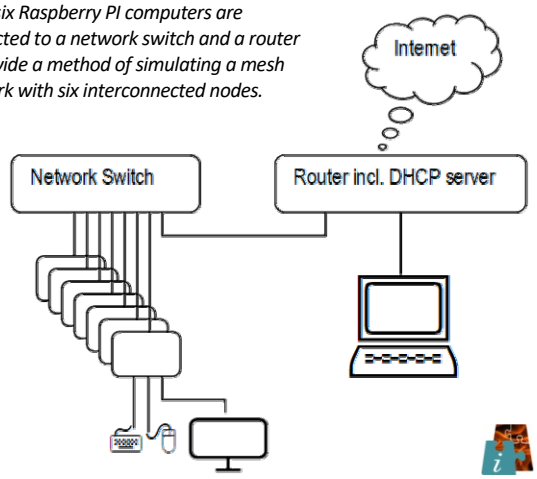

Simulation for Fire Management in Tunnels

***Daniel Octavio de Toledo**, of Geocontrol, spells out the benefits of computer simulation for understanding and managing the effects of fires in transport tunnels. Similar software has been developed for use in mine incident response.*

The Value of Simulation

Although the INDIRES project is concerned with the immediate provision of information in the early stages of an incident, we have to acknowledge that, on occasions, the availability of live data can be limited. For this reason, the provision of actual data is being augmented by simulations that will allow rescue controllers to predict atmospheric conditions in specific areas of a mine.

In this project, we have already created a simulation of the effects of fire, which can be used in the event of an emergency. Sample studies have been carried out using this software to predict the temperature and carbon monoxide evolution for certain fire scenarios in the Velenje Coal Mine in Slovenia.

However, since that software has not yet been used in the management of a mine rescue, we thought it would be interesting to present some examples of how similar software has been used in the management of two transport tunnels. Although the applications are very different from that of managing the response to a mining accident, we trust that you'll recognise the value of computer simulation studies for this application.

Fire management is a key factor when it comes to the design of the safety installations of any kind of tunnel. Depending on the type of tunnel, the fire management can differ. Here we look at a road tunnel with bidirectional traffic, and a railway tunnel with a subway station.

In both types of tunnels, a fire ventilation strategy is required, but, since both present quite significant differences, the actions to be carried out also differ.

Road Tunnels

Within road tunnels, two types of tunnel merit special attention: tunnels with unidirectional traffic, and tunnels with bidirectional traffic.

In tunnels with unidirectional traffic, the strategy consists of pushing the smoke towards the tunnel exit, imposing a speed higher than the critical velocity in the upstream section.

However, in tunnels with bidirectional traffic the management is more complex, since the main goal is to establish a strong control over the smoke and make it advance at a slow velocity, which is favourable for its stratification.

To investigate this in further detail, we're going to look at the results obtained for the La Barosa road tunnel, which is situated in the Spanish province of Leon. This bi-directional road tunnel is 720 metres long, it has a maximum height of 7m, and it slopes at 1.24%. Each of the two lanes – one in each direction – carries 3,162 vehicles per day.

Due to structural constraints, it isn't possible to build an emergency exit inside the tunnel. As a result, it is necessary to ensure that, in case of a fire in the tunnel, the smoke will stratify for sufficient time to allow the people in the tunnel be able to reach a place of safety.

The longer the time the smoke remains stratified, the better for the people in the tunnel, since they will have better conditions to escape and reach a safe place.

In order to promote the stratification of the smoke, the smoke needs to advance slowly. According the literature, the velocity must be around 1 to 1.5 metres per second. In fact, to get an exact figure, an analysis needs to be conducted for each tunnel, since other factors, such as the buoyancy effect, can make a difference.

To have an overview of the smoke behaviour in this tunnel, two simulations were carried out. Simulation 1 involved a fire with a power of 8MW in the centre of the tunnel, with an initial velocity towards Ourense, which is towards the west. Simulation 2 involved the same fire source but, this time, with an initial velocity towards Ponferrada, which is towards the east.

There's a mechanical ventilation system in the tunnel which is provided by eight 37kW jet fans, distributed along the entire length of the tunnel.

The best way to assess the behaviour of the smoke is by analysing the evolution of the visibility in both cases.

In Simulation 1, the smoke initially heads towards Ourense, at the west end, due to the initial velocity and the buoyancy effect. In order to ensure that the smoke advances at a lower velocity, one of the jet fans close to the Ponferrada portal is activated, pushing the smoke towards the east.

Studies of smoke progression in the La Barosa road tunnel illustrate the benefit of simulation during a mine fire.

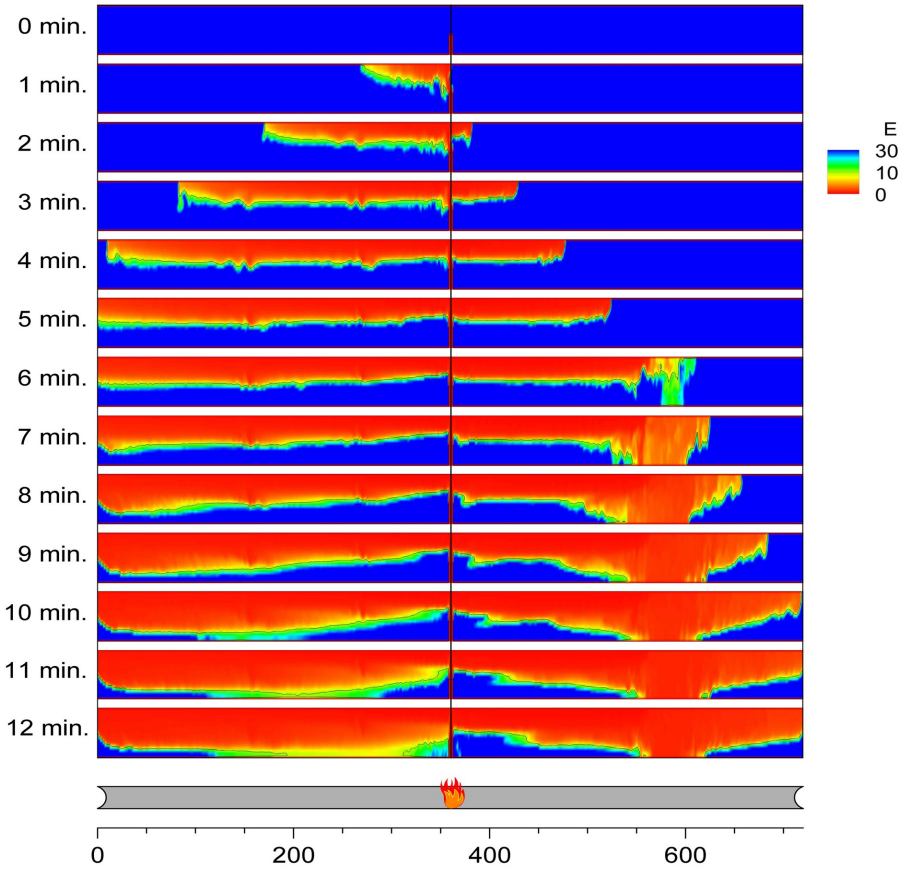

The evolution of visibility in Simulation 1 at La Barosa road tunnel. Visibility improves from red to yellow, to green to blue.

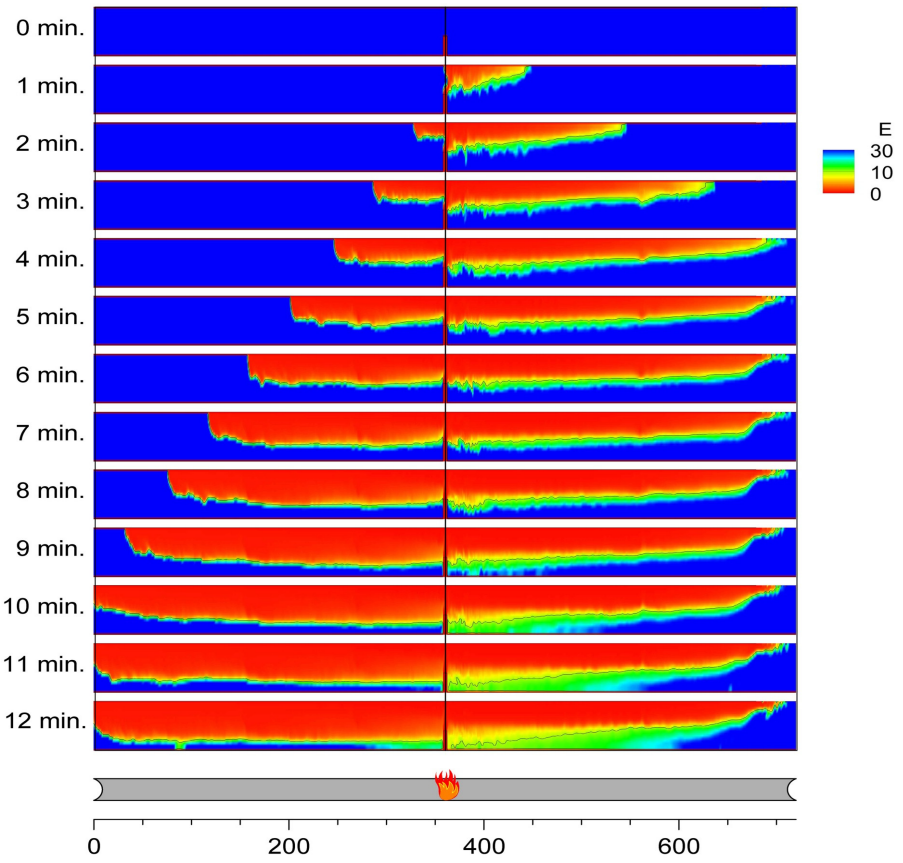

The evolution of visibility in Simulation 2 at La Barosa road tunnel. Visibility improves from red to yellow, to green to blue.

This way, the smoke that initially headed towards the west keeps advancing in that direction, but at a slower velocity. However, there is a new smoke mass flow that heads towards the east because of the activation of the jet.

When the smoke arrives at the jet fan location – which is close to Ponferrada portal – it falls to the road, due to the instability of the jet fan. However, this has no negative consequences on the safety of people in the tunnel, because this happens only after seven minutes, by which time it is expected that all the people will have moved out of this region of the tunnel.

After 12 minutes, the smoke can be pushed towards the west end of the tunnel, in order to have a smoke-free zone to allow escape from the Ponferrada portal.

In Simulation 2, the behaviour of the smoke is different.

At the beginning, the smoke heads towards Ponferrada, which is at the east end, due to the initial velocity. However, the buoyancy due to the slope of the tunnel induces a new flow of smoke that heads towards the west.

Therefore, after five minutes, there are two main fronts of smoke advancing towards both portals. As time goes by, the front heading towards the east progresses no further and begins to abandon this region. This because the fire increases in intensity, and so does the buoyancy effect.

All this happens at a slow velocity, without the need to use the mechanical ventilation, which is very positive, since it promotes the stratification of the smoke.

After 12 minutes, the smoke can be pushed towards the west, because all the people are expected to have fled the tunnel and the emergency services are due to intervene.

Subway Station in a Railway Tunnel

A subway station located in a railway tunnel has very different design features compared to a road tunnel. Therefore, it's interesting to assess how to manage a fire in this sort of infrastructure.

To understand this, we'll take a look at the proposed Torrelavega railway tunnel, which will be located in the Spanish region of Cantabria. The double track rail tunnel will be 615m long, it will have a varying cross-sectional area from 47 to 133 square metres, and a maximum incline of 1.5%. Mechanical ventilation will be present only in the mezzanine.

One of the platforms, the lateral platform, has a length nearly of 300m, while the other, the central platform, has a length of 110m.

Normally, trains operating on this line will use the 100m portion of platform near the escalators and stairs. In some cases, the Transcantabrico train, which is of 250m long, will operate on this line; which is why there is a 300m platform.

When a fire occurs on one of the tracks close to the platform, the passengers vacate the platform and head towards the escalators, stairs or emergency stairs.

In this case, there are two main goals to ensure acceptable conditions for the passengers during the evacuation of the tunnel. The first goal is to try to ensure that the smoke remains stratified for as long as possible. The second goal is to prevent the smoke from entering the connection with the mezzanine level through the stairs and escalators.

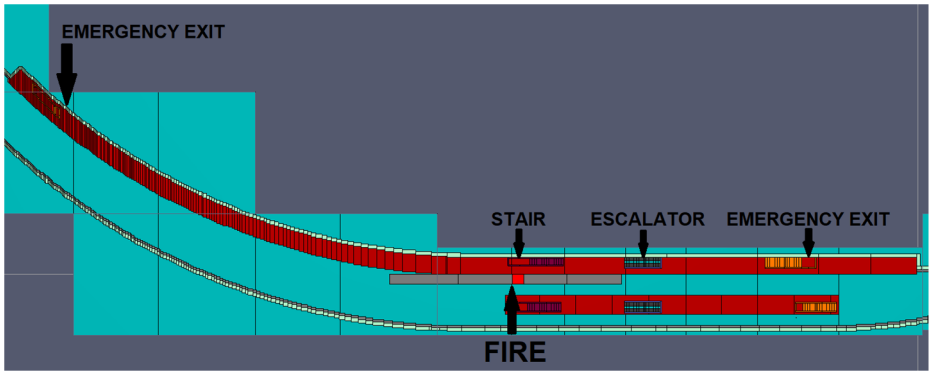

Layout of the station in the Torrelavega railway tunnel

To ensure these goals, several measures have been considered.

In order to achieve the first goal, the best strategy involves not activating the mechanical ventilation. This way, the smoke is free of sources of instability and, therefore, it's more likely to remain stratified.

On the other hand, in order to prevent the smoke from getting into the escape routes, some smoke screens are deployed in the locations of the escalators. Simultaneously, there is an air supply in the mezzanine level that induces a slight airflow towards the tunnel, both on the escalators and the stairs.

There's also a pressurization system in the emergency stairs, which induces a slight ventilation towards the tunnel when the door is open.

The best way of assessing the behaviour of the smoke is by analysing the evolution of visibility, since this variable indicates the presence of smoke.

For this purpose, in a simulation, a 15MW fire has been placed on the track close to the lateral platform. This blocks the stairs, thereby forcing the passengers to head towards the escalator and the two emergency exits, as shown in the diagram at the top of the page.

The evolution of visibility is analysed in horizontal planes at a height of 2m, as shown in the main diagram on this page.

As can be seen, the smoke remains stratified until after four minutes from the start of the fire. At this time, the smoke falls and reaches the access routes where, at this time, nobody is expected to be present.

This period of time is enough to allow the passengers to reach a safe zone. In addition, simulation shows that no smoke enters the escape routes of the escalators and the stairs, which means that the ventilation in the mezzanine level –which consists of setting up an air supply – is effective.

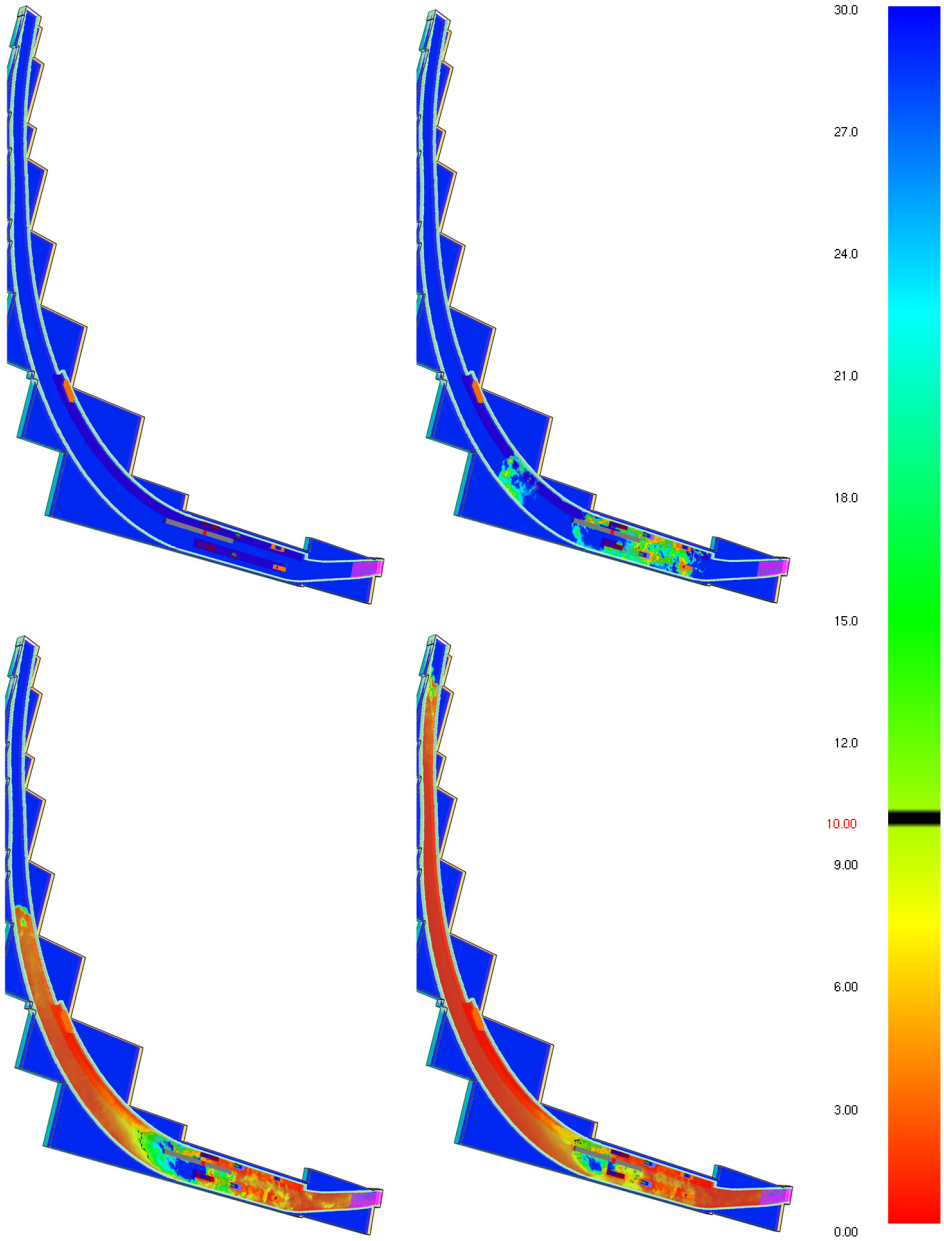

The evolution of visibility in a simulation at the Torrelavega railway tunnel for 0, 4, 8 and 12 minutes. Visibility improves from red to yellow, to green to blue.

Sharing Knowledge and Experience at Recent Partners' Meetings

During the last 12 months, INDIRES partners met in Slovenia and Spain. Here we look at these events, which are important for collaboration, and hence to the successful completion of the project.

Exchanges via email and telephone generally enable effective collaboration. However, the project consortium also meets together twice a year. These partners' meetings play an important role. They permit face-to-face technical discussions between partners working together on areas in the project. They allow participants to learn about aspects of the project they're not personally involved in. And they often provide additional benefits, for example the underground visit to the Velenje Coal Mine, as we'll see later.

Velenje, Slovenia

Our first meeting in the second year of INDIRES took place in Velenje, Slovenia. Here we were welcomed by project partner Premogovnik Velenje.

On the first day, each partner gave a presentation on their work in the six months since we last met together. Each such presentation was followed by a question and answer session. There was also plenty of time for partners to have in-depth discussions, both during the day and over dinner in the evening.

The second day provided the opportunity either to visit the Velenje Mining Museum or to take a trip into the working coal mine. Most partners opted to see the workings of the Velenje Coal Mine. One of the strengths of the INDIRES consortium is its interdisciplinary nature. Indeed we have partners who are involved in coal production and researching new mining technologies, through to partners who are contributing their specialist skills such as radio communication and robotics. The underground trip was, therefore, a valuable experience for those people who have valuable technical skills but do not have a mining background. These people reported that the trip was invaluable in providing a better insight into the environment and the harsh conditions in which the equipment being developed in INDIRES has to operate and survive.

Madrid, Spain

The second partners' meeting took place near Madrid, in April 2019. This time, the meeting was hosted by project partner Universidad Carlos III de Madrid (UC3M). The meeting followed our recent submission of the project's official First Periodic Report, which was an important milestone, in that it represented the successful completion of the first half of the project.

Following the usual presentations on the first day, on the second day, we were given a tour of the University's Robotic Lab where we saw one of the robots being developed in INDIRES. We were then shown several robots that are being developed for other projects. Included here were industrial robots, a robot that is able to bore through the ground, and several robots that have been developed for medical therapeutic purposes.

Next Meeting

As this newsletter goes to press, we will be preparing for our next project meeting which will be held in Essen, Germany, where DMT will be our hosts. A news report on the meeting will be posted on the INDIRES website in mid-October.

Resilient Sensors: Ensuring Information Flow

***Angel Rodriguez**, of Carlos III University, Madrid, and **Mike Bedford**, of the University of Exeter,* *look at the resilient, survivable sensors that are being developed in INDIRES, and at the benefit they will provide in the early stages of an incident response.*

In ensuring that technology is in place to assist in the planning of a rescue operation, it must be assumed that considerable damage will have occurred to the equipment that is used during the mine's normal operation. In particular, it is likely that some of the sensors that are used in the mine's day-to-day operation will have been destroyed. In addition, it is possible that the power and communication networks on which such sensors rely may also be inoperable. For this reason, work in being carried out into sensor units that will survive fires, explosions, floods and falls of rock, so they are available for use in planning an incident response. Here we look at the work that has been carried out over the last two years.

Protection Strategy

Major consideration has been given to methods by which the sensor unit will be able to withstand the various adverse conditions that may be present, during and shortly after a serious incident.

Three separate approaches are being adopted to give the sensor units adequate protection from damage.

First of all is the mechanical design of the sensor unit. It is designed to be able to withstand the static pressure resulting from flooding, up to 10 bar. This degree of pressure-proofing is considered sufficient to also withstand the shockwave caused by a blast. It also has protection against high temperatures. In addition, special attention is being given to the antenna, that is used to provide a backup communication capability, as discussed later under the heading of *Power and Data*.

Second, a method of installation has been developed so that the sensor unit is protected by virtue of its mounting configuration. In particular, it will be mounted in a hole in the gallery wall with only the end protruding so it is able to sense the environmental conditions. Furthermore, the hole will be drilled in a recess, to provide protection for the exposed end of the sensor from the effect of a blast wave following an explosion.

The INDIRES sensor is being designed to withstand conditions that would destroy most electronic equipment.

Finally, the operation of the sensor will offer an additional layer of protection. In particular, the sensor unit will normally be in a standby state in which the internal sensors and electronic circuitry will be protected by virtue of being isolated from the external environment. Following an incident, the sensor will only be placed in its active state – which involves opening a series of slots to allow the internal sensors to monitor the external conditions – when the hazardous nature of the environment has reduced to an acceptable level.

While discussing the topic of deployment – that is placing the sensor unit in its active state – it is appropriate to discuss the means by which this will take place. In particular, attention was given to whether this should be automatic, or manually by remote control, from the mine or rescue control centre.

The solution adopted was to rely on a remote manual method of deployment because this will reduce the likelihood of false deployments and the consequential cost to mine operators. However, this does not prevent an upgrade to automatic deployment, but

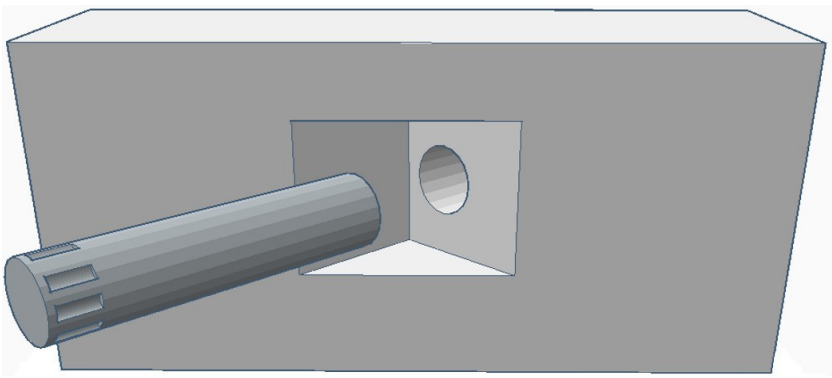

Sensor units will be protected because most of them (except for the end with the slots for sensing the atmosphere) will be fitted into a hole in the gallery wall, and the unit will also be in a recess.

Correct choice of battery type has reduced battery replacement interval from 4 to almost 20 years.

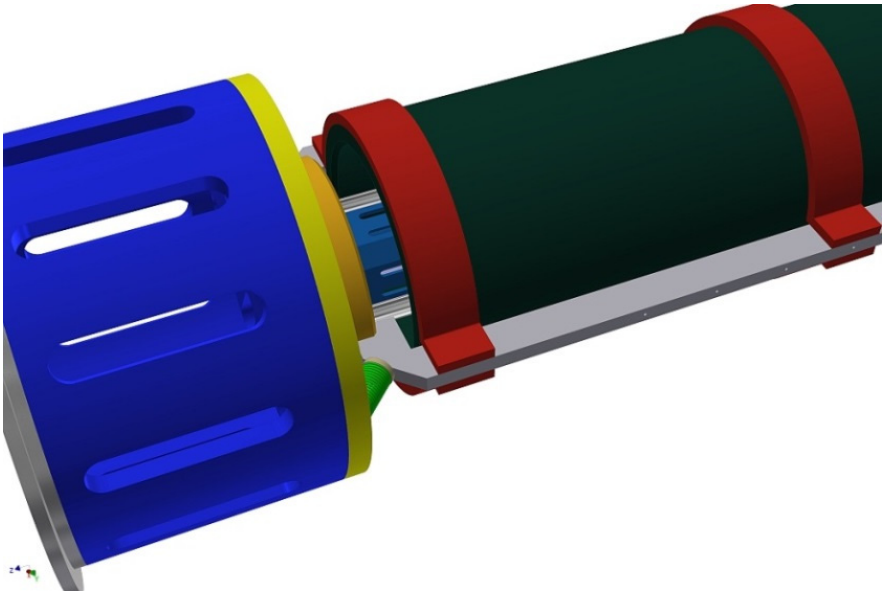

Deployment of the sensor involves opening the slots to allow gasses to enter, once any flooding has receded and hot gasses have reached an acceptably low level. (Early CAD study)

this would be initiated by a remote computer system, rather than from within the sensor unit.

Power and Data

At the outset, it was clear that, although the sensors should be able to operate without the mine's power and communication networks, an alternative power source and communication capability would be required. Certainly the sensors will be connected to the mine's fixed networks, because they will provide superior performance if and when they're available, but a backup should be provided. First, the sensor units will contain through-the-earth radios so they can form part of an emergency mesh network. Second, they will contain batteries that will allow operation when wired power is not available.

Initially, it was thought that the batteries would be rechargeable and they would be trickle-charged under normal conditions from the fixed power network. However, further analysis suggested that the use of a non-rechargeable battery would result in a lower cost of maintenance. Most modern rechargeable batteries have a shelf life of between two and five years. By way of contrast, an advanced type of non-rechargeable battery called Lithium Iron Disulphide maintains up to 95% of its energy for as long as 20 years, depending on the manufacturer. For this reason, this type of battery has been chosen. Unless the sensor unit has been used during an emergency without fixed power, therefore, routine changing of the internal batteries will be needed very infrequently. Furthermore, a remote test facility will be provided to allow the health of the battery, and the other components of the unit, to easily be checked on a routine and regular basis.

Moreover, an internal energy management scheme, allowing selective activation and disconnection of major sub-circuits (sensors, radio), to extend battery life and thus operation time, has been implemented.

Sensors

The choice of sensors inside the unit is dictated by three requirements. First, and perhaps most importantly, sensors are need to help decide whether the conditions are safe to send rescuers into certain areas of the mine. Equally important are sensors such as microphones, that will be used to detect signs of life, and thereby determine the location of any trapped miners. There will also be sensors that are used to determine if the sensor unit can safely be fully deployed, by opening its protective slots to allow the atmosphere to be monitored, or whether the external conditions are still too severe for it to survive deployment.

Taking these requirements into consideration, it was decided that the following sensor devices would be incorporated into the unit:

First of all, some sensors will be external to the external so they are always operable. These will be used to decide if it safe to deploy the internal sensors. Included here are devices for monitoring pressure and temperature.

The remaining sensors are internal, so they are only deployed when external conditions are "safe", as detected by the external sensors. Included here are atmospheric sensors for methane (CH_4,), carbon monoxide (CO), carbon dioxide (CO_2) and oxygen (O_2), plus microphones and devices for temperature and relative humidity. Additional external sensors, for example to monitor airspeed, can easily be added.

Installation Process

In addition to designing the sensor unit itself, attention has been given to the method of installing it in a gallery. The aim has been to recommend a method that provides adequate protection for the sensor unit and can easily be carried out by mine operators using their existing equipment such as drill rigs.

Originally, it was considered that the sensor unit would be fitted into a hole in the roof, from which it would drop after an incident. However, this philosophy was adapted to simplify the design and provide additional protection.

First, it was decided that the unit would be installed in a hole in the wall, not the roof, because hot gasses would accumulate more at the top of the gallery. Second, instead of dropping from a hole, the design was simplified so that deployment involved opening protective slots in the casing to allow gasses to be sensed. However, this change meant that the end of the sensor with the slots could not be embedded in the hole. Accordingly, the hole would be drilled into a niche cut into the gallery wall to provide protection from debris and blast waves progressing down the gallery following an explosion. Two shapes of niche could be used, a prismatic niche as shown on the previous page, or a rectangular niche. It is envisaged that the choice will be made by the mine engineers, depending on local conditions.

The design of the sensor unit, most importantly its diameter, was decided based on a survey of the sizes of drill bits generally available in collieries. The final design, therefore, will have a diameter between 125mm and 150mm. Furthermore, following consultation with those coal producers involved in INDIRES, advice can be given on methods of installing the sensor unit. In addition, investigations have been carried out into various means of securely fixing the unit into the hole in the gallery wall. Grouts were considered initially but a decision was made to incorporate a mechanical device similar to an expansion bolt.

Mobile Platforms for Incident Response in Coal Mining – a Subjective View of What you Should Know

*INDIRES project partner EMAG is developing a mobile platform to support rescue operations by transporting essential materials. **Wojciech Korski** considers the important characteristics of such a vehicle.*

The INDIRES ETV

One of the objectives of the RFCS INDIRES project is to deliver a mobile transport platform with an autonomous power supply, for transporting mechanical aids for the purpose of an incident response in a coal mine. Having experience with coal mining inspection platforms – for example in our previous development of the MPI, Mobile Inspection Platform – our efforts aim to deliver a suitable platform, despite the restrictions imposed by ATEX. Within the scope of INDIRES, the ETV platform is dedicated to the transport of other results of the project, including composite props and a torsional drilling rig.

The INDIRES Electric Transport Vehicle (ETV) is a wheel-based battery-powered electric mobile platform. The platform is designed for use in parallel with rescue teams, thus a simplified approach to ATEX requirements has been adopted, to maintain proper mobility and reduce risk at the same time. Additional safety features, including a methane sensor and remote power-down are present. To provide different transport needs, the ETV features an exchangeable cargo deck that can also be used as an independent transport palette. The platform design takes into account the effect of possible complete battery discharge on the success of the rescue action. For this purpose, among other features, the ETV includes rechargeable battery replacement for range extension, and wheel disengagement for ease of removal if the platform is powered down.

The INDIRES ETV platform is dedicated for use during rescue actions in underground coal mines. Its main purpose is to reduce and/or shift the rescue team's workload from transport efforts to more specialized actions, and possibly reduce the duration of the incident response, as well as personnel exposure.

As a result of our work on this electric vehicle, and our previous developments in this area, I'm able to provide the following view of what you should be looking for in choosing a mobile platform for incident response. We designed the INDIRES ETV in consideration with these recommendations.

General Advice

When an incident occurs, time is of the essence, and there is little time available for the important task of careful decision making. Decisions made are weighted against benefits and the risks they bear. Mobile vehicles have potential in coal mining incident response – the ability to shift workload as well as to reduce exposure for rescue personnel, among other things. During a rescue response, decision-makers should be aware of some basic points about mobile platforms so, when the need arises, choices can be made more quickly.

One basic point – by mobile platforms we understand all vehicles, both autonomous and controlled, regardless of their size or main purpose. Whatever it is (transport, inspection, drilling etc.), they all have this one thing in common – mobility.

Basics of Mobile Platforms – What to Look Out For

When talking about mobile platforms, the most basic understanding one should have is that they are vehicles. And for vehicles, the most important attribute is mobility – the quality describing the ability to move around. This is a function of the physical parameters, propulsion and

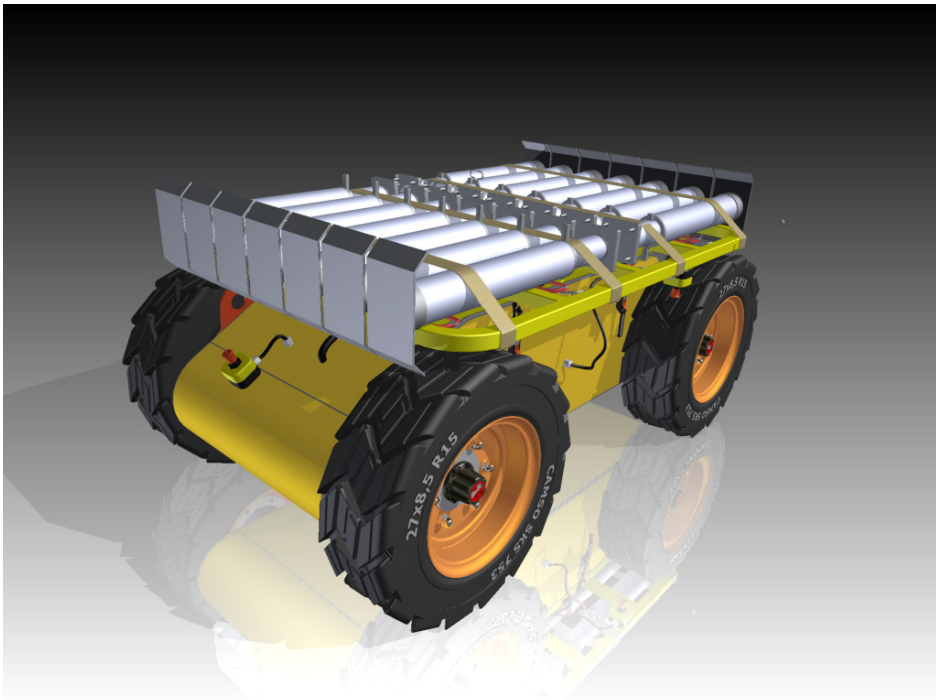

The INDIRES ETV mobile platform (ATEX EPL Mb/Mc) is designed for transporting mechanical aids during rescue actions, e.g. roof support composite props (computer rendering)

MPI (Mobile Inspection Platform) – ATEX EPL Ma platform based on flameproof enclosures for visual and thermal inspection of incident area with gas monitoring equipment.

traction – and it may also be influenced by other features such as the turning circle of the wheels.

In the case of vehicles for coal mining, one should consider mobility in terms of the confined space of working – not only in the incident area, but also along the route to that area. Thus, the first parameters the potential user should consider are the dimensions and mass. Those are pretty straightforward to understand, however they also have secondary meaning, especially when considering rescue actions. They influence the ease of handing in case of failure or the complete de-energization of the vehicle's power source. Consider this – a de-energized mobile platform constitutes an aid that has turned into an obstacle – both literally and figuratively – for rescue efforts, that may require work and time to overcome. Take into account that features of the platform – for example, the option to disengage the wheels from the gearboxes and shafts – that may come in handy in such situations.

Continuing on the subject of mobility, parameters that potential users should check are speed and directional control, gradeability, clearance, and the height of an obstacle that the vehicle can cross. The numerical value of speed is less import than its comparison with the task at hand – the main thing is not to slow operations down unnecessarily. Directional control will dictate whether the platform can turn and how much space is required for manoeuvres. For example, skid steering allows for point-turning, while turning wheels impose some radius of movement. Gradeability – a measure of how steep a slope the vehicle negotiate, clearance and the height of obstacles that can be crossed – reflects on the need for road preparation or the lack thereof. Remember to take those parameters into account when estimating the time needed for a given action, or even the feasibility of one. Remember also, that those parameters may change, for example, depending on the size of the load and centre of mass.

The RFCS INDIRES project focuses on situations where, due to the incident, the infrastructure – which includes the power network – is non-operational, so equipment must rely on its internal power supply. This will be the case for almost every mobile platform. It results in a limited range and/or time of operation,– parameters that will definitely influence the platform's usability. Consider also options for extending the range, such as recharging or battery replacement, as this will avoid the vehicle becoming an obstacle for the rescuers, as discussed above.

There is also one more quality of a mobile platform that should be considered – steering and controllability. While different solutions are possible, your attention should be on the range of the remote control, how many personnel it requires, and whether your miners and/or rescuers can operate it, i.e. ease of operation.

There certainly will be other parameters, connected with the function to be performed by the platform. Included here are the load capability, in case of the ETV being developed in INDIRES, or gas measurement capabilities in the MPI, which is a vehicle previously developed by EMAG. It would be hard to generalize these but, as with the above parameters, be sure to check them against your situation, your needs and requirements. There may also be features that impact your assessment so don't be afraid to ask questions.

Influence on Incident Response – be Prepared

This may seem obvious – after all during a rescue action you use equipment to influence the result of the operation in your favour. However, the use of a mobile platform in the confined space of a coal mine during an incident response can influence the situation in a number of ways. Before committing to the use of a mobile platform, take a moment to consider them.

Start with the task – assess whether the platform can perform the given operation more effectively than rescuers or other equipment. Inquire as to other gains from using the given equipment.

Estimate the cost of using the equipment in terms of resources such as manpower, consumables and time. Obtain information about how many personnel will be required to transport the platform and to operate it. List additional equipment and materials or consumables that may be required to transport or operate the platform and check its availability. Estimate the time cost for using the platform – include any preparatory, transport and assembly operations that will be necessary. Remember to consider the time of operation, to avoid fully discharging the batteries and, therefore, causing the vehicle to become an obstacle. If necessary, the theoretical range or time of operation must be shortened. If there is the possibility of battery replacement or recharging – take the time needed to do that into account.

Mobile platforms are rather bulky equipment so consider the space occupied. This applies not only in terms of the platform itself, but also other operations that will have to be performed in the vicinity. Will there still be space for the necessary transport activities? Remember about the possibility of failure or de-energization – the space occupation might be for a longer period than expected.

Safety of Use – Asses the Risks

Coal mines are quite different from other environments in one important respect – the presence of a potentially explosive atmosphere due to coal dust or methane. For this reason all equipment taken into mine is required to be specially designed to reduce the risk of initiating a fire or explosion. There are different types of protection, based on different approaches towards this goal. The type (or types) of protection used will be an individual property of the mobile platform.

Basically, there will be three categories of platforms. These are (1) non-ATEX – no EPL (Equipment Protection Level) established, (2) EPL Mb/Mc, and (3) ATEX EPL Ma. These categories are described in the following paragraphs.

EPL Ma is the safest, designed to operate with up to 100% of methane present. There are only two ways to achieve this level of protection: either the use of intrinsically safe devices, something which is impossible for mobile platforms, or the use of two independent tiers of protection. This results in an overall increase in mass, and generally no possibility of battery replacement. As such, it heavily influences the mobility and range of the platform. An example of this is the MPI which is shown on the previous page.

ATEX EPL Mb/Mc devices should be switched off before the methane concentration reaches the lower explosive level (LEL). This is hardy possible in the case of a mobile platform with internal power sources. However, types of protection resulting in EPL Mb or Mc allow the relative mobility of the platform to be maintained, unless flameproof enclosures are used. Generally, such platforms are designed for operation in areas where the presence of personnel is allowed, due to the non-existence of an explosive atmosphere. The INDIRES ETV is designed according to this assumption.

Just one additional note on ATEX devices – remember about group II and III equipment (EPL Gx/Dx). Although not intended for coal mines, in your case it may be a viable option – not every situation is identical. Its protection may be just enough, when considering the risks and benefits.

The last category is platforms with no EPL established. These are "civilian" devices which, under normal conditions, shouldn't be used in coal mines. In some situations, there may be no alternative except to consider such platforms. This is especially true when ATEX requirements make it impossible to design such equipment accordingly – see the next section.

Regardless of the platform considered, be aware of the different types of protection and the justification behind them. These are the methods of risk reduction and, in most cases, rescue actions involve risk analysis. Weigh the risk of the platform's ATEX (or non-ATEX) design against other aspects of your incident response.

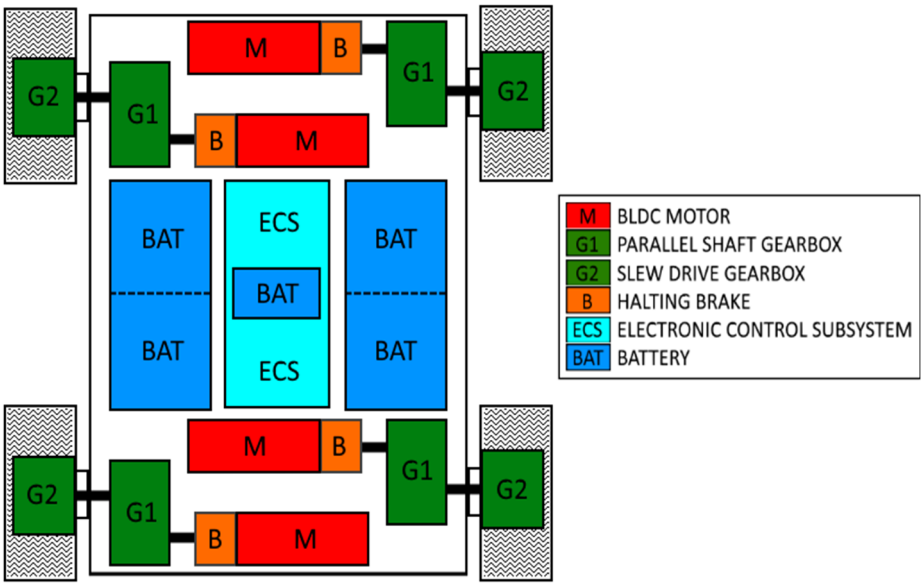

Understanding the justification behind different types of protection may be important for the platform risk assessment, as illustrated by the ETV block diagram – different colours indicate different types of protection used.

ATEX Trade-offs – Know What to Expect

The ATEX directive is not the most friendly when it comes to designing mobile platforms for any purposes. It enforces restrictions that weigh heavily, but indirectly, on mobility. The types of protection, the limitations on the equipment's power, and the materials used all cause designers to make choices that are universally in conflict with the main task of a mobile platform. Below are just a few problems that influence mobile platforms.

Materials: ATEX harmonized standards allow only up to 15% of light metals, like aluminium, to be used in device enclosures, thus leaving steel as the main component of enclosures used in coal mining. This results in a higher mass of platforms when, for example, the car industry uses more aluminium, specifically to reduce the mass of vehicles. In simple terms – ATEX-certified mobile platforms will be heavy.

Enclosures: This is a consequence of the materials issue with the complication of the need for flameproof enclosures, which are the most common – and often the only – solution for using high power equipment, such as motors, in coal mining. Flameproof enclosures are also essential in obtaining EPL Ma through independent tiers of protection. Flameproof enclosures are much heavier than standard enclosures, and should not be opened when the enclosed equipment has electrical power applied. This leads to the next problem.

Batteries and Recharging: ATEX standards limit the types of batteries that can be used and/or recharged in an underground coal mine. Also, battery replacement may be impeded because of the use of enclosures that cannot easily be opened, if at all. Expect limited range, and limited or no possibility of recharging.

Motors: This applies mostly to smaller mobile platforms, such as unmanned robotic vehicles like drones, which are intended to provide information. Do not expect these to be ATEX compliant – it is simply unfeasible to create small motors that do not require additional enclosures to be safe. Simply, don't expect drones to be used for coal mining under normal conditions. Having said that, unmanned robotic vehicles are being developed in INDIRES for information gathering in the early stages of an incident response.

No two mobile platforms for coal mining will be alike, just like no two incident responses will be. There are no universal choices. We hope that this material will help you make the right one.

The Mining Rescue Service in Coal Mine Velenje – an Illustrated Guide

***Matej Spindler**, of Premogovnik Velenje, introduces the rescue brigade at the Velenje coal mine. In a largely pictorial guide, which illustrates the brigade's facilities and capabilities, he covers the history and the state-of-play today, while welcoming further advances that INDIRES will bring.*

Safety is a value that we constantly strive for at the Coal Mine Velenje. Employees are aware that they are the most responsible for their own safety. Despite this, however, and setting up a state-of-the-art monitoring system for mining gases, implementing thoroughly tested defence and rescue plans, and many other measures to improve safety, cannot prevent dangerous underground mining accidents. The fact that such accidents occur in explosion-threatened places that are inaccessible to other public emergency services means that, in such circumstances, only qualified and well-trained, on-premise rescuers can be counted on. For this reason, and also due to legal requirements, at Coal Mine Velenje we have established an underground rescue station and mining rescue brigade.

History

The beginnings of an organized mining rescue service at the Coal Mine Velenje, according to accessible written sources, date back to 1893, when methane explosions occurred in the mine on January 30th and on February 20th. The injured miners were brought to the surface by their co-workers. Because they did not have any special equipment at that time, they were only able to enter the mine when there was no longer any danger. Of course, there was no chance to rescue any other survivors.

Only with the official launch of the Mining Rescue Brigade on July 20th, 1907, did they acquire two closed-circuit breathing apparatus sets called Pneumatogen type 2b. In 1926, the Mining Rescue Brigade had fifteen members and had seven closed-circuit breathing apparatus sets of various types. The mining rescue service has been constantly developing and improving, both in the field of equipment, and in personnel. In the 1980s, when coal production was at its peak, with an annual production of more than five million tonnes of coal, the Mining Rescue Brigade had the most members. This equated to 272 members, of whom 215 were active rescuers, in 1984.

During the last 50 years, the Mining Rescue Brigade has been involved in 222 rescue operations, with members of the brigade having completed around 20,000 operational hours, of which 9,700 hours were under closed-circuit breathing apparatus. The Mining Rescue Brigade also assisted other mining and coal companies in Slovenia and abroad. They are regularly

Left: Smoke chamber for low-visibility orientation training

Below: Climbing out of a shaft

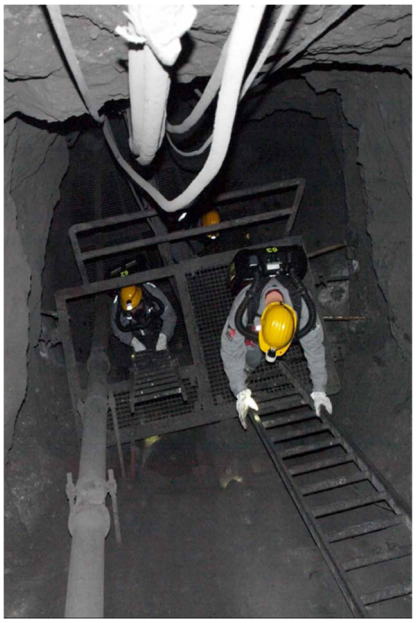

Above: Underground rescue with breathing apparatus

Right: Helicopter rescue practice

Above: On October 19th 2018, the 43rd Regional Rescue Exercise entitled "Earthquake" was held. All regional ambulance and fire services participated in the exercise. Part of the exercise was a simulation of an accident in the Coal Mine Velenje. The premise of the accident was an outbreak of CO_2 gas and an injured worker.

cooperating with other rescue teams, including cave rescue teams and mountain rescue teams.

Rescue Brigade Today

Today, the well-equipped Mining Rescue Brigade has 96 active members, of which 76 are rescuers trained in working with closed-circuit breathing apparatus. Twelve of them are also trained in helicopter transport, so they can intervene even more quickly in potential operations in the whole of Slovenia. We have two types of closed-circuit breathing apparatus available for rescue: the Dräger PSS BG 4, of which we have 67, and the R-12 type, of which we have 80.

The Coal Mine Velenje has been contracted by the Republic of Slovenia for protection and rescue in the case of mining and other natural disasters since 1995. Our rescuers are involved in rescue operations which have to be carried out in atmospheres that are detrimental to health and, as such, need to be carried out using closed-circuit breathing apparatus. For this purpose, we have a highly qualified unit ready to go at all times.

The rescue brigade is organised in such a way that we have at least one team of rescuers in each part of the mine in each shift. If necessary, this team can be immediately assembled and equipped with rescue equipment from an underground storage location, and they can immediately begin to intervene. For larger-scale operations, we can activate the entire brigade with an automated system of pagers/SMS messages. Additional rescue teams can be formed in fifteen minutes after the first call to our emergency station.

The most physically fit workers are selected as members of the brigade. To join the brigade, workers must pass a theoretical test and a practical knowledge examination. Further education of rescuers is well taken care of. Included here is the organization of professional lectures, training in first aid, orientation testing in the smoke chamber, and the organization of rescue drills in the coal mine and in a fire simulation tunnel. Brigade members are expected to be in a good level of fitness, which is verified by the Cooper test.

A rescue exercise is organized every month for rescuers to practice various tasks that are expected during a rescue operation. A major exercise with a simulated accident is organized twice a year, when the entire brigade, and also other rescue services, are involved.

In Conclusion

Any contribution to improving safety, and providing assistance by way of easier rescue techniques and procedures, is very welcome. For this reason, we at Coal Mine Velenje are very supportive of research projects like INDIRES.

We look forward to seeing the results of the project and, hopefully, we can quickly implement them in a real-world environment.

The INDIRES consortium comprises ten partners in five member states of the European Union. These organisations, who are dedicated to working together to bring about a successful conclusion to the project and, in so doing, make mining safer, include coal mine operators, universities, consultancies – one of whom is also an equipment manufacturer, and research institutes. These organisations all have extensive experience of collaborative research projects in the coal mining sector.